Hettinject Titan 50

- For sturdy, positive fitting and friction locked attachment of the Titan 1 shelf support (order no. 0 079 713)
- Concealed installation behind the shelf
- Can be used with face layers from 4 mm
- For panel thickness 50 mm
- Only for mounting in edged lightweight panels
- Permits adjustment of the height, lateral fit and tilt of the shelf support
- Permits use of different glues, e.g. Henkel Loctite® or Delo Duopox®
- For load capacity, see Titan 1 shelf support
- Plastic, white

Order no.	PU
9 135 216	1/20 ea.

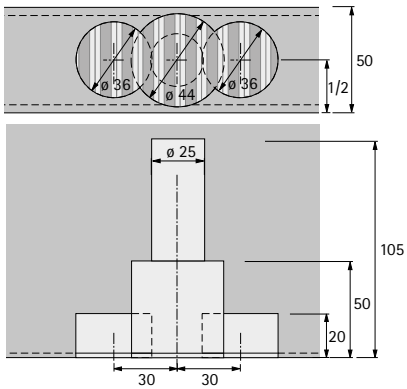

Titan 1 with side adjustment

- Concealed installation behind the shelf
- Bolt: 10 mm AF
- Max. load capacity is 50 kg/m² for shelves measuring 1000 x 300 mm, 100 kg/m² for shelves measuring 1000 x 250 mm and 160 kg/m² for shelves measuring 1000 x 200 mm
- Height adjustment: ± 4 mm
- Side adjustment ± 4 mm
- Minimum shelf thickness: 24 mm
- Adjustment of shelf tilt
- Steel, galvanised

Page reference:
- For fixing screws (order no. 0 065 480), see page 882
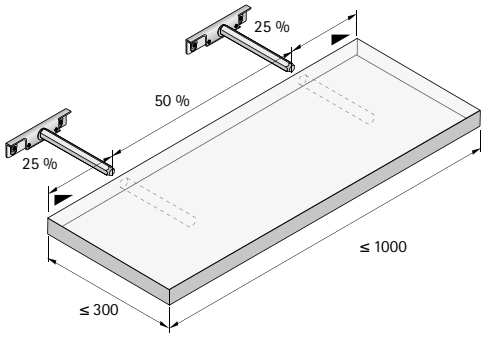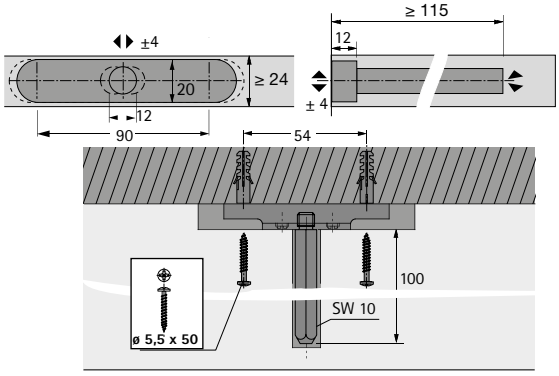
Order no.	PU
0 079 713	1/20 ea.